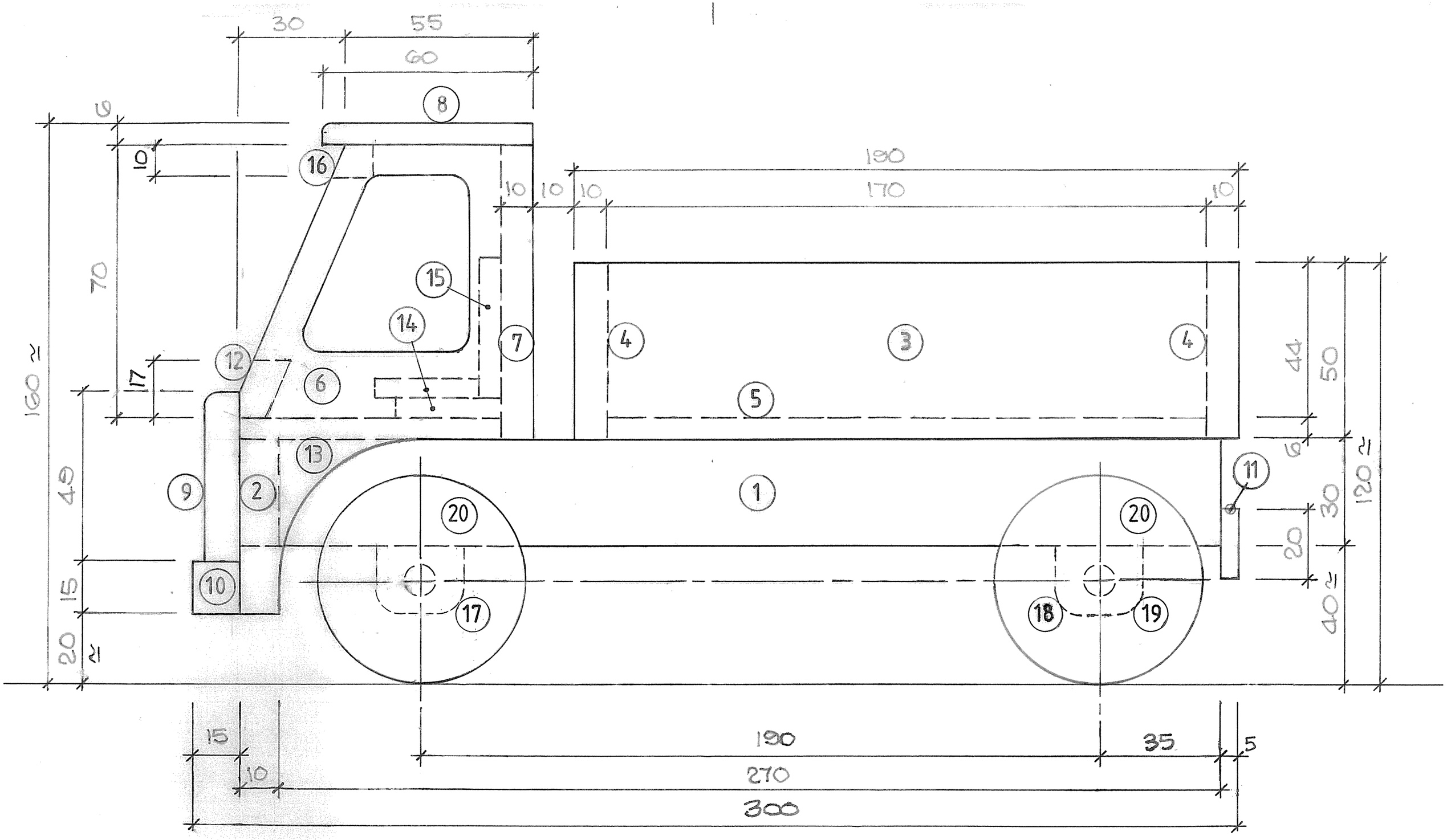

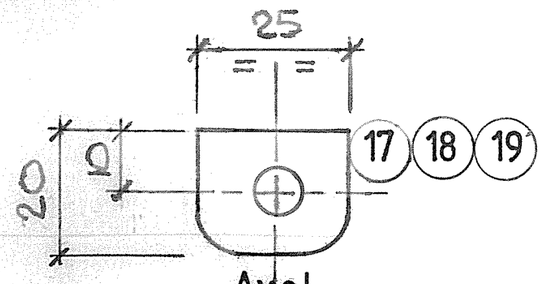

Axel

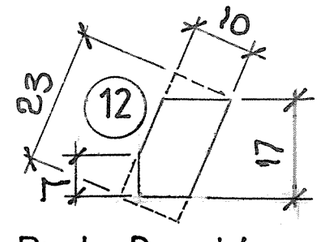

Dash Board (nom dims)

TRUCK

NB 2024